THIS DRAWING ONLY APPLIES TO THE ACTION MODEL.

EX with 50 BMG Bolt

NOTES:
THREAD SIZE: 1-1/2 X 16
THREAD PROFILE: 60° V
TPI: 16
MAJOR DIA: 1.494
PITCH: .062
PITCH DIAMETER: 1.458

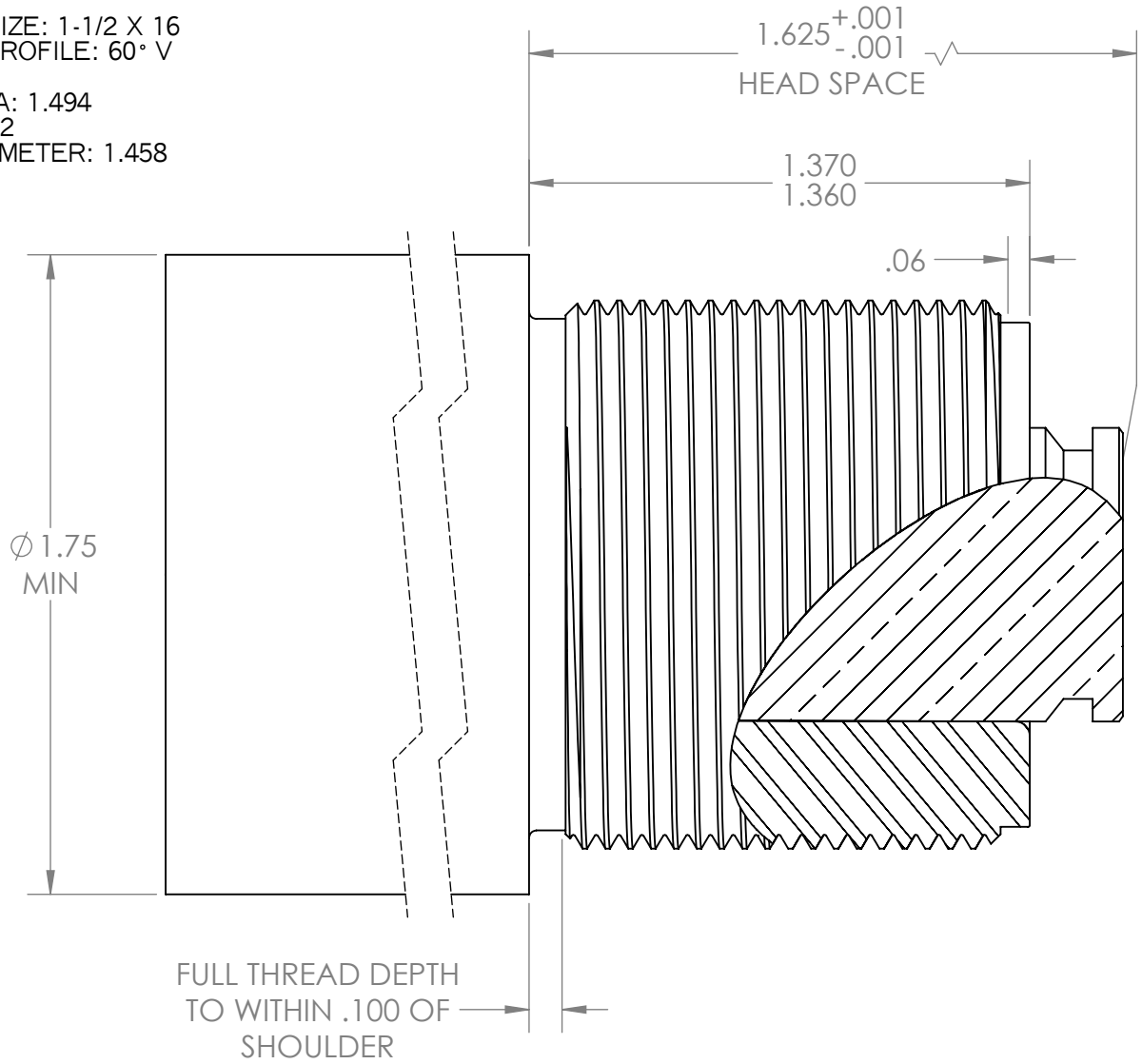

WARNING:

1. There have been some bastard actions due to customer request or rework. It is your responsibility to verify the thread size in the action you are chambering for.

2. BAT Machine Inc. builds custom actions that may or may not match this drawing. and does not accept any liability from the use or misuse of this information. ALL actions should be measured individually.

3. The end user is soley responsible for the safe use of the product.

PROPRIETARY AND CONFIDENTIAL
THE INFORMATION CONTAINED IN THIS DRAWING IS THE SOLE PROPERTY OF BAT MACHINE CO. INC. ANY REPRODUCTION IN PART OR AS A WHOLE WITHOUT THE WRITTEN PERMISSION OF BAT MACHINE CO. INC. IS PROHIBITED.

DIMENSIONS ARE IN INCHES TOLERANCES UNLESS OTHERWISE SPECIFIED:
ANGULAR: ± 1 DEGREE
TWO PLACE DECIMAL ±.005
THREE PLACE DECIMAL ±.001

MATERIAL

FINISH

DO NOT SCALE DRAWING

	NAME	DATE
DRAWN	D. Thom	12/5/2013
CHECKED	B. Thom	12/23/2013
ENG APPR.		
MFG APPR.		
Q.A.		

COMMENTS:

BAT Machine Co. Inc.

1-1/2 X 16
EX BMG

SIZE A | DWG. NO. tenon-1500 | REV. A

SCALE:2:1 | WEIGHT: | SHEET 1 OF 1